Microsemi® *AcuEdge*™ Technology
ZL38080

Hands-Free Automotive Audio Processor
Product Brief

Document ID# 149152 Version 2 May 2014

Features

- DSP with Voice Hardware Accelerators
- Dual ΔΣ DACs with output sampling up to 48 kHz and internal output drivers
  - 4 single-ended or 2 differential Output Amps
- 44.1/48 kHz Stereo Music Playback with Voice
- A single Digital Microphone input supporting up to 2 Microphones
- Two TDM ports shared between PCM and Inter-IC Sound (I^2S)
  - Each port provides sample rate conversion and synchronous and asynchronous TDM bus operation
- SPI Slave port for host processor interface
- Master SPI port for serial Flash interface
- 14 General Purpose Input/Output (GPIO) pins
- General purpose UART port
- Boots from SPI, UART, or Flash allowing easy firmware updates
  - Can run unattended (controllerless), self-booting into a configured operational state
- Ultra-low and Standby off power
- Full duplex operation supports AEC (up to 256 ms) in both Narrowband and Wideband operation (8 kHz or 16 kHz respectively)
- Psychoacoustic noise reduction
  - Single microphone
  - Stationary noise reduction
- AGC/ALC
- Dynamic Range Compression
- Built-in support for G.712 and G.722
- Single and Dual Tone Generation
- *MiTuner*™ GUI Software
  - Automated AEC tuning

Applications

- Hands-Free Phone and Audio capability for Automotive applications

Ordering Information

Device OPN[1]	Package	Packing
ZL38080LDF1	64-pin QFN (9x9)	Tape & Reel
ZL38080LDG1	64-pin QFN (9x9)	Tray

1. *The Green package meets RoHS 2 Directive 2011/65/EU of the European Council to minimize the environmental impact of electrical equipment.*

Description

The Microsemi *AcuEdge* Technology *ZL38080 Hands-Free Automotive Audio Processor* is designed to provide leading edge acoustic echo cancellation and noise reduction for the Hands-Free Automotive market.

The ZL38080 device is a highly adaptable hardware platform designed to support high performance audio processing applications. The ZL38080 provides a powerful DSP with voice specific hardware accelerators, one digital microphone interface, two independent 16-bit DACs, and two flexible TDM interfaces in a single 64-pin QFN package.

The Microsemi *AcuEdge* Technology ZLS38080 license-free Firmware provides Acoustic Echo Cancellation (AEC), noise reduction and a variety of other voice enhancements to improve both the intelligibility and subjective quality of voice in harsh acoustic environments.

Performance

- AEC Tail Length: 256 ms
- AEC sampling rate: 8 and 16 kHz
- Single Talk TCLw: > 60 dB
- Double Talk TCLw: > 40 dB
- Double Talk Attenuation: < 3 dB
- Noise reduction up to 30 dB

© 2014 Microsemi Corporation. All Rights Reserved.

Voice Processing Series Solution Overview

Designed for world-class high definition voice applications, Microsemi's new ZL380 series of audio processors features the company's Microsemi *AcuEdge*™ Technology. This innovative technology is a set of highly-complex and integrated algorithms that allows the user to extract more information from the audio environment. The new Microsemi *AcuEdge* Technology consists of license-free, royalty-free intelligent audio IP algorithms. When combined with Microsemi's highly-integrated ZL380 series of audio processors, the solution accelerates customers' time-to-market via validated reference design and easy-to-use development tools including the Microsemi Audio Interface Box (AIB) Kit which utilizes the *MiTuner*™ GUI software.

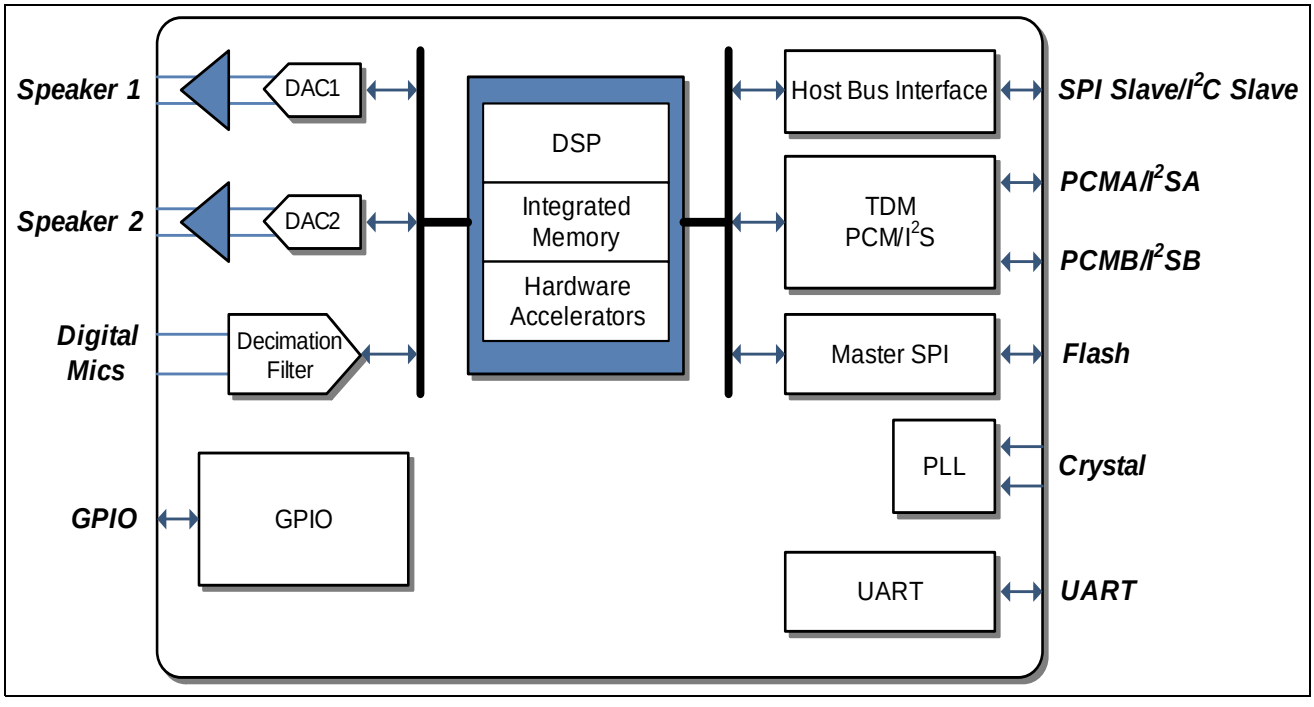

ZL38080 Block Diagram

The *ZL38080 Hands-Free Automotive Audio Processor* provides the following enhanced voice processing feature set.

Microsemi ZL38080 Hardware

- Host Interface: SPI, UART, I^2C
- Standalone (controllerless) auto-boot from Flash
- Two clock independent TDM ports (PCM or I^2S)
- 14 GPIOs, configurable with built-in control features
- Crystal-less operation (with a valid TDM clock)
- Digital microphone interface supporting one or two digital microphones

© 2014 Microsemi Corporation. All Rights Reserved.

- Dual 16-bit digital-to-analog converters (DACs)
  - Headphone amps capable of four single-ended or two differential outputs
  - Two independent headphone drivers
  - 32 mW output drive power into 16 ohms
  - Impulse pop/click protection

Microsemi *AcuEdge*™ Technology ZLS38080 Firmware

- Wideband and Narrowband Acoustic Echo Cancellation
- Initial convergence conditioning
- Psychoacoustic noise reduction
  - Single microphone
  - Stationary noise reduction
- Low active power consumption
- Multi-tone generation
- Signal mixing
  - 44.1 kHz/48 kHz music mixed with 8 kHz/16 kHz voice
- Howling detection/cancellation
- Various encoding/decoding options:
  - 16-bit 2's complement (linear)
  - G.711 A/μ law
  - G.722
- Send and receive path equalizers
  - 16-band for Narrowband mode
  - 22-band for Wideband mode
- Comfort noise generation
- 44.1 kHz/48 kHz bypass mode
- Configurable Cross-Point Switch

AEC Auto-Tuning

To optimize the acoustic properties of a given system design, the Audio Processor firmware requires gain and level tuning. The mechanical design, including the speaker and microphone quality and placement, will all affect the system's acoustic performance. Microsemi has developed *MiTuner*™ GUI Software (ZLS38508) and the Microsemi Audio Interface Box (AIB) hardware (ZLE38470) to automatically optimize the firmware's tunable parameters for a given hardware design, facilitating the system design process and eliminating the need for tedious manual tuning. The *MiTuner* GUI Software provides step-by-step instructions that allow the software's algorithms to achieve a high level of acoustic performance for a given enclosure.

© 2014 Microsemi Corporation. All Rights Reserved.

Application Example - Hands-Free Automotive Block Diagram

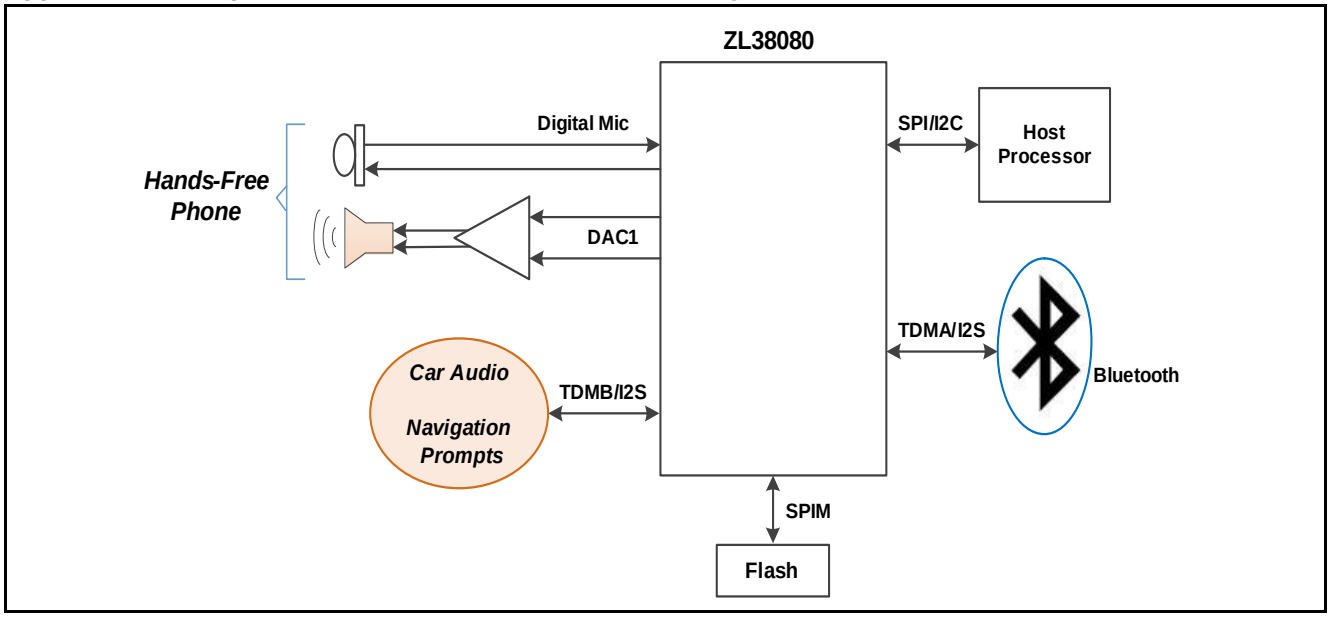

Device Pinout - Top View

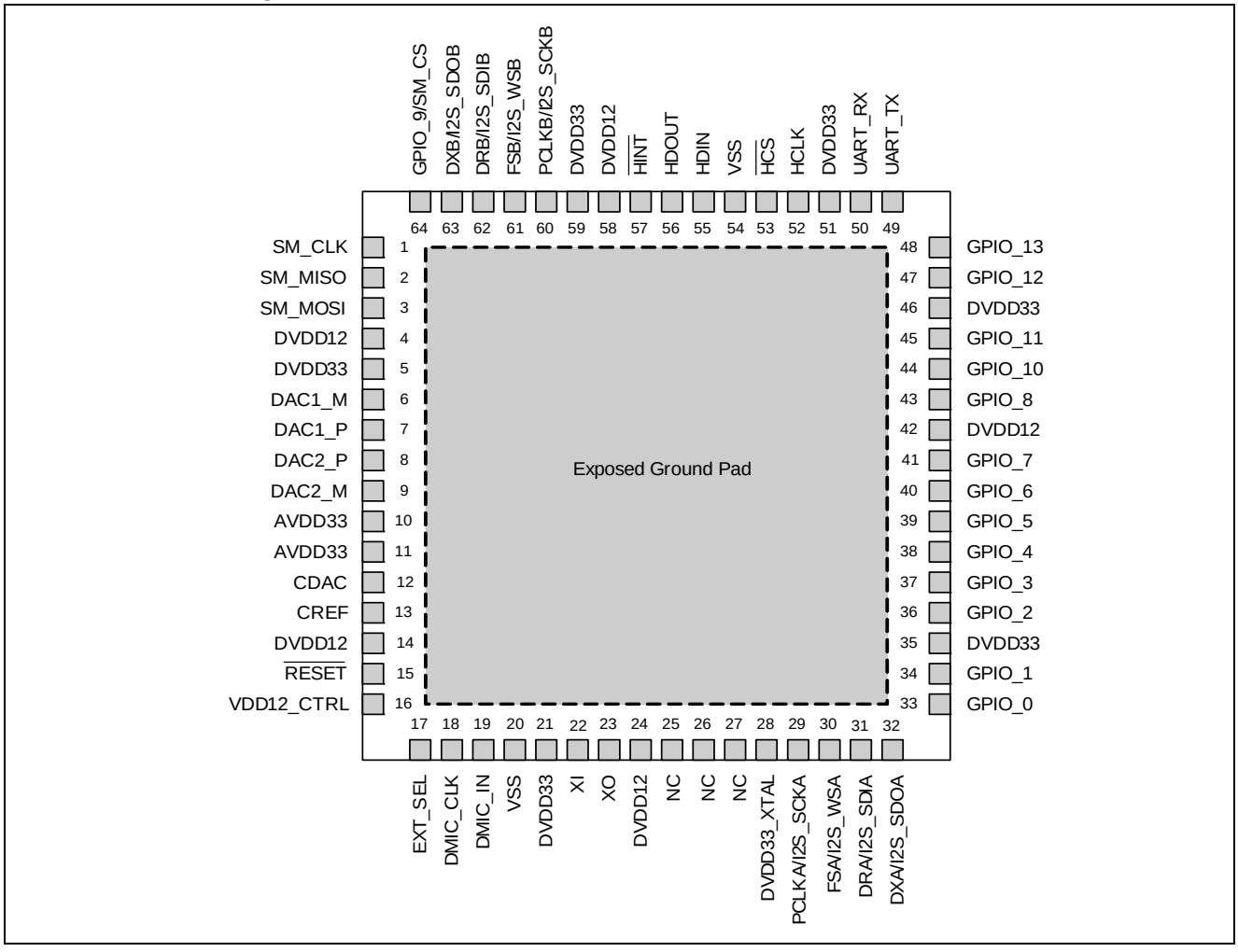

© 2014 Microsemi Corporation. All Rights Reserved.

Package Outline (64-Pin QFN)

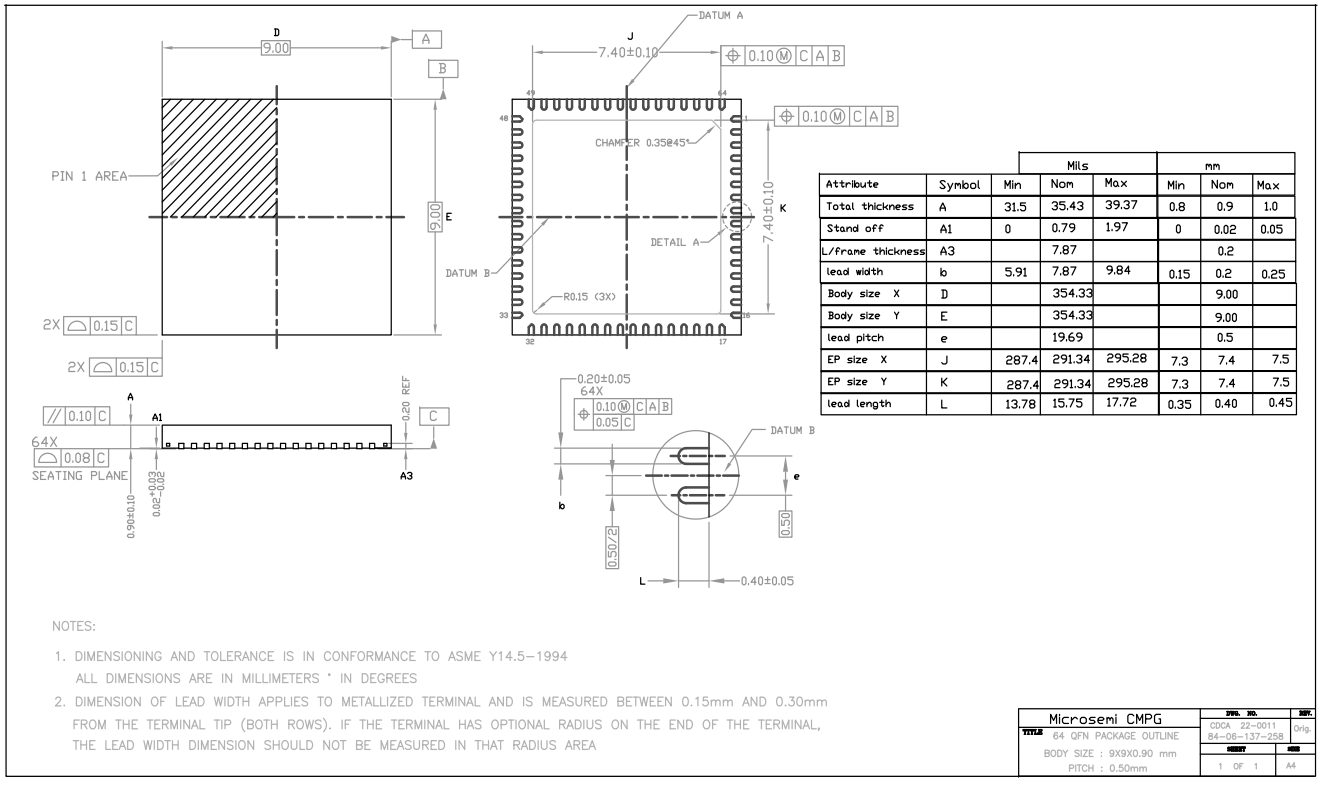

		Mils			mm		
Attribute	Symbol	Min	Nom	Max	Min	Nom	Max
Total thickness	A	31.5	35.43	39.37	0.8	0.9	1.0
Stand off	A1	0	0.79	1.97	0	0.02	0.05
L/frame thickness	A3		7.87			0.2	
lead width	b	5.91	7.87	9.84	0.15	0.2	0.25
Body size X	D		354.33			9.00	
Body size Y	E		354.33			9.00	
lead pitch	e		19.69			0.5	
EP size X	J	287.4	291.34	295.28	7.3	7.4	7.5
EP size Y	K	287.4	291.34	295.28	7.3	7.4	7.5
lead length	L	13.78	15.75	17.72	0.35	0.40	0.45

NOTES:

1. DIMENSIONING AND TOLERANCE IS IN CONFORMANCE TO ASME Y14.5–1994
   ALL DIMENSIONS ARE IN MILLIMETERS ° IN DEGREES
2. DIMENSION OF LEAD WIDTH APPLIES TO METALLIZED TERMINAL AND IS MEASURED BETWEEN 0.15mm AND 0.30mm FROM THE TERMINAL TIP (BOTH ROWS). IF THE TERMINAL HAS OPTIONAL RADIUS ON THE END OF THE TERMINAL, THE LEAD WIDTH DIMENSION SHOULD NOT BE MEASURED IN THAT RADIUS AREA

Microsemi CMPG	DWG. NO.	REV.
TITLE 64 QFN PACKAGE OUTLINE	0004-22-0011 84-06-137-258	Orig.
BODY SIZE : 9X9X0.90 mm	SHEET	
PITCH : 0.50mm	1 OF 1	A4

© 2014 Microsemi Corporation. All Rights Reserved.

Information relating to products and services furnished herein by Microsemi Corporation or its subsidiaries (collectively “Microsemi”) is believed to be reliable. However, Microsemi assumes no liability for errors that may appear in this publication, or for liability otherwise arising from the application or use of any such information, product or service or for any infringement of patents or other intellectual property rights owned by third parties which may result from such application or use. Neither the supply of such information or purchase of product or service conveys any license, either express or implied, under patents or other intellectual property rights owned by Microsemi or licensed from third parties by Microsemi, whatsoever. Purchasers of products are also hereby notified that the use of product in certain ways or in combination with Microsemi, or non-Microsemi furnished goods or services may infringe patents or other intellectual property rights owned by Microsemi.

This publication is issued to provide information only and (unless agreed by Microsemi in writing) may not be used, applied or reproduced for any purpose nor form part of any order or contract nor to be regarded as a representation relating to the products or services concerned. The products, their specifications, services and other information appearing in this publication are subject to change by Microsemi without notice. No warranty or guarantee express or implied is made regarding the capability, performance or suitability of any product or service. Information concerning possible methods of use is provided as a guide only and does not constitute any guarantee that such methods of use will be satisfactory in a specific piece of equipment. It is the user’s responsibility to fully determine the performance and suitability of any equipment using such information and to ensure that any publication or data used is up to date and has not been superseded. Manufacturing does not necessarily include testing of all functions or parameters. These products are not suitable for use in any medical and other products whose failure to perform may result in significant injury or death to the user. All products and materials are sold and services provided subject to Microsemi’s conditions of sale which are available on request.

For more information about all Microsemi products visit our website at www.microsemi.com

TECHNICAL DOCUMENTATION – NOT FOR RESALE



Microsemi Corporate Headquarters
One Enterprise, Aliso Viejo CA 92656 USA
Within the USA: +1 (949) 380-6100
Sales: +1 (949) 380-6136
Fax: +1 (949) 215-4996

Microsemi Corporation (NASDAQ: MSCC) offers a comprehensive portfolio of semiconductor solutions for: aerospace, defense and security; enterprise and communications; and industrial and alternative energy markets. Products include mixed-signal ICs, SoCs, and ASICs; programmable logic solutions; power management products; timing and voice processing devices; RF solutions; discrete components; and systems. Microsemi is headquartered in Aliso Viejo, Calif. Learn more at **www.microsemi.com**.

© 2014 Microsemi Corporation. All rights reserved. Microsemi and the Microsemi logo are trademarks of Microsemi Corporation. All other trademarks and service marks are the property of their respective owners.